A1

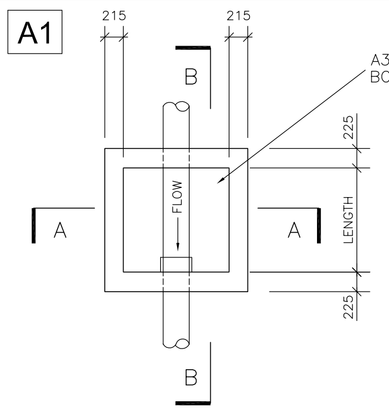


PLAN

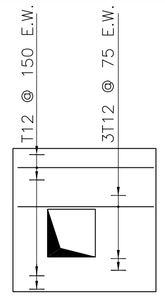


PLAN OF ROOF SLAB

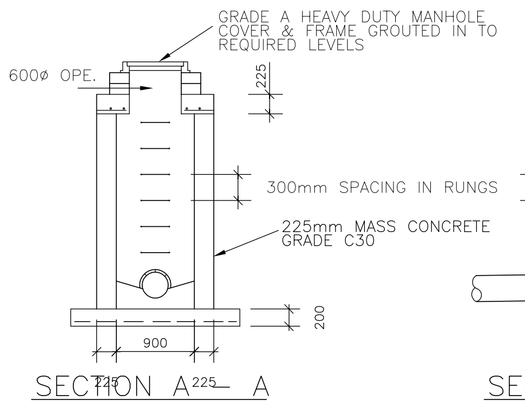


SECTION A – A

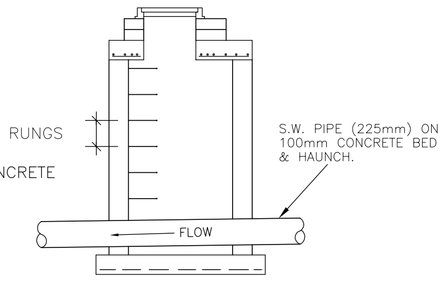


SECTION B – B

## DETAILS OF STANDARD MANHOLE UP TO 3000 DEEP

(FOR DIMENSIONS ETC. SEE TABLE 1)

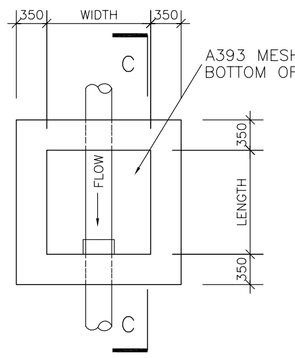


PLAN

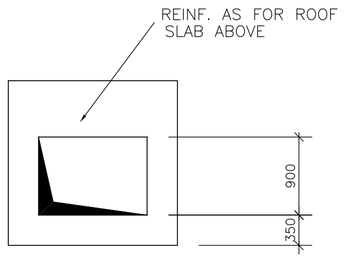


PLAN OF CHAMBER SLAB

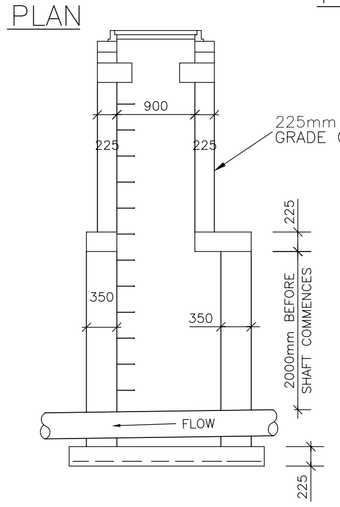


SECTION C – C

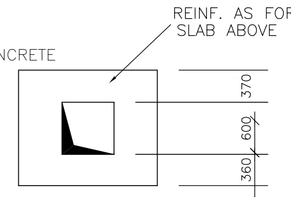


PLAN OF ROOF SLAB

## DETAILS OF STANDARD MANHOLE 3000–6000 DEEP

(FOR DIMENSIONS ETC. SEE TABLE 1)

| DEPTH | DIAMETER OF PIPE | ANGLE | MINIMUM DIMENSIONS LENGTH | MINIMUM DIMENSIONS WIDTH | P.C. CONCRETE CIRCULAR SHAFT INTERNAL MH ø |
|---|---|---|---|---|---|
| LESS THAN 1200 | 100 | 0–90° | 1200 | 750 | 1050 |
| | 150 | 0–90° | 1200 | 750 | 1050 |
| | 225 | 0–30° | 1200 | 750 | 1050 |
| | | 30°–90° | 1200 | 750 | 1050 |
| | 300 | 0–30° | 1200 | 750 | 1050 |
| | | 30°–90° | 1200 | 900 | 1050 |
| | 375 | 0–90° | 1200 | 900 | 1050 |
| | 450 | 0 | 1200 | 1050 | 1050 |
| | | 0–90° | 1200 | 1200 | 1050 |
| | 525 | 0 | 1200 | 1200 | 1050 |
| | | 0–90° | 1200 | 1200 | 1200 |
| | 600 | 0 | 1200 | 1200 | 1200 |
| | | 0–45° | 1200 | 1350 | 1200 |
| | | 45°–90° | 1350 | 1350 | 1350 |
| | 750 | 0–45° | 1200 | 1350 | 1350 |
| | | 45°–90° | 1350 | 1350 | 1350 |
| | 900 | 0–45° | 1350 | 1500 | 1500 |
| | | 45°–90° | 1500 | 1500 | 1800 |
| 1200–3500 | 100 | 0–90° | 1200 | 900 | 1200 |
| | 150 | 0–90° | 1200 | 900 | 1200 |
| | 225 | 0–90° | 1200 | 900 | 1200 |
| | 300 | 0–90° | 1200 | 900 | 1200 |
| | 375 | 0–90° | 1200 | 900 | 1200 |
| | 450 | 0 | 1200 | 1050 | 1200 |
| | | 0–45° | 1350 | 1350 | 1350 |
| | | 45°–90° | 1200 | 1350 | 1350 |
| | 525 | 0 | 1200 | 1200 | 1200 |
| | | 0–45° | 1200 | 1350 | 1350 |
| | | 45°–90° | 1350 | 1350 | 1350 |
| | 600 | 0–45° | 1200 | 1350 | 1350 |
| | | 45°–90° | 1350 | 1350 | 1350 |
| | 750 | 0–45° | 1200 | 1350 | 1350 |
| | | 45°–90° | 1350 | 1350 | 1350 |
| | 900 | 0–45° | 1350 | 1500 | 1800 |
| | | 45°–90° | 1500 | 1500 | 1800 |

TABLE 1

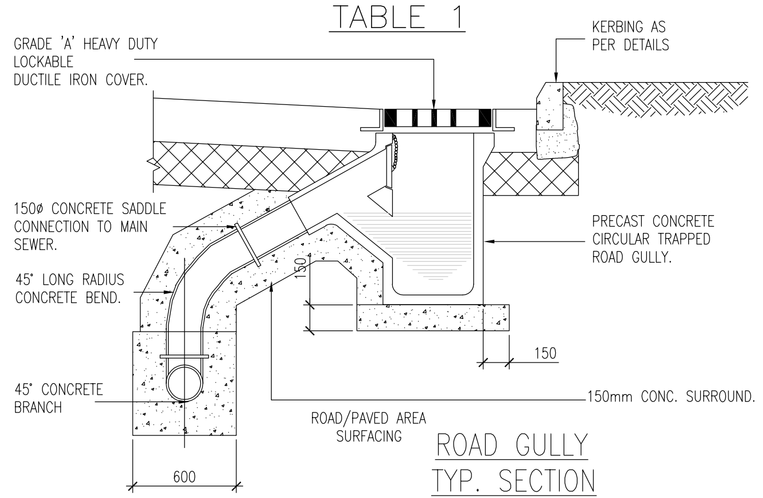


ROAD GULLY TYP. SECTION

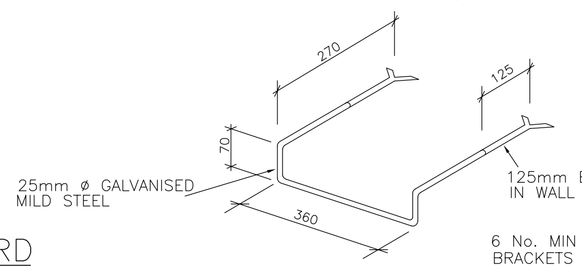


DETAIL OF STEP RUNG

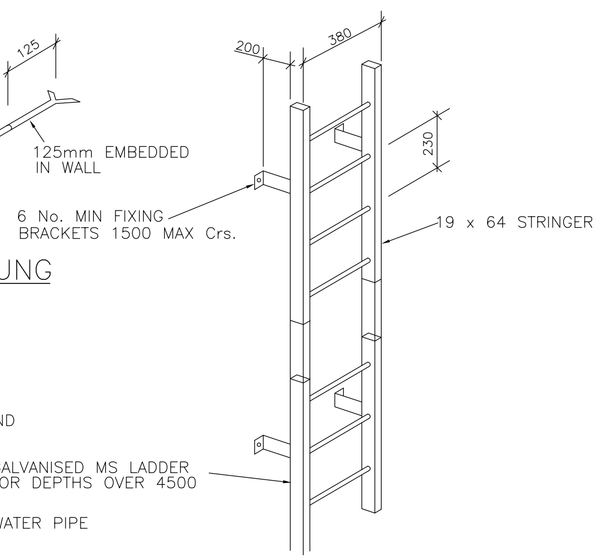


DETAIL OF ACCESS LADDER

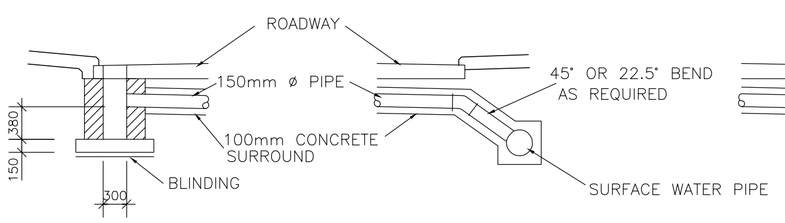


GULLY CONNECTION TO S.W. SEWER ACROSS ROADWAY

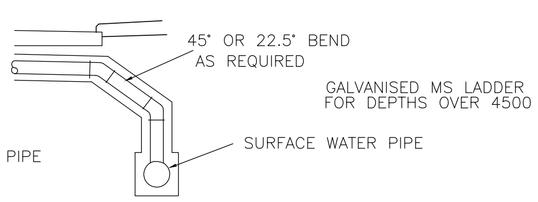


## DRAINAGE – TRENCH WIDTHS, PIPE DIMENSIONS, CONCRETE & DISPOSAL QUANTITIES

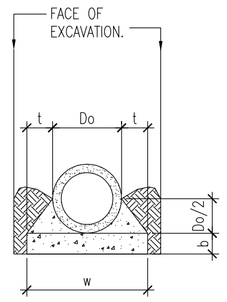


TYPE 1

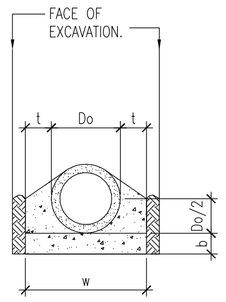


TYPE 2

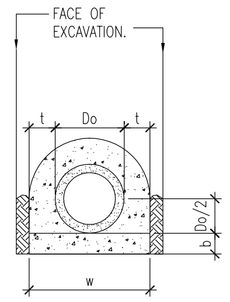


TYPE 3

| PIPE DIAMETER INCH | PIPE DIAMETER MM | Do | b | t | w | WIDTH OF TRENCH | BED ALL TYPES | CONCRETE cum/m RUN OF SEWER HAUNCH & SURROUND 1 | 2 | 3 | DISPOSAL cum/m RUN OF SEWER 1 | 2 | 3 |
|---|---|---|---|---|---|---|---|---|---|---|---|---|---|
| 4 | 100 | 150 | 100 | 100 | 350 | 600 | 035 | 016 | NOT USED | 058 | 069 | NOT USED | 111 |
| 6 | 150 | 210 | 100 | 100 | 410 | 700 | 041 | 022 | | 076 | 098 | | 152 |
| 9 | 225 | 300 | 120 | 150 | 600 | 750 | 072 | 038 | | 156 | 175 | | 293 |
| 12 | 300 | 400 | 120 | 150 | 700 | 850 | 084 | 056 | | 198 | 251 | | 393 |
| 15 | 375 | 480 | 150 | 150 | 780 | 950 | 117 | NOT USED | 120 | 260 | NOT USED | 420 | 540 |
| 18 | 450 | 560 | 150 | 150 | 860 | 1000 | 129 | | 160 | 300 | | 540 | 660 |
| 21 | 525 | 650 | 150 | 150 | 950 | 1100 | 143 | | 180 | 340 | | 660 | 810 |
| 24 | 600 | 735 | 150 | 150 | 1035 | 1200 | 155 | | 190 | 380 | | 770 | 950 |
| 27 | 675 | 870 | 200 | 200 | 1150 | 1350 | 230 | | 300 | 550 | | 1000 | 1200 |
| 30 | 750 | 910 | 200 | 200 | 1310 | 1450 | 262 | | 340 | 660 | | 1250 | 1530 |
| 36 | 900 | 1080 | 200 | 200 | 1480 | 1650 | 296 | | 380 | 740 | | 1590 | 1960 |
| 42 | 1050 | 1260 | 250 | 250 | 1760 | 1900 | 440 | | 580 | 1080 | | 2270 | 2770 |
| 48 | 1200 | 1425 | 250 | 250 | 1925 | 2100 | 481 | | 640 | 1230 | | 2720 | 3310 |

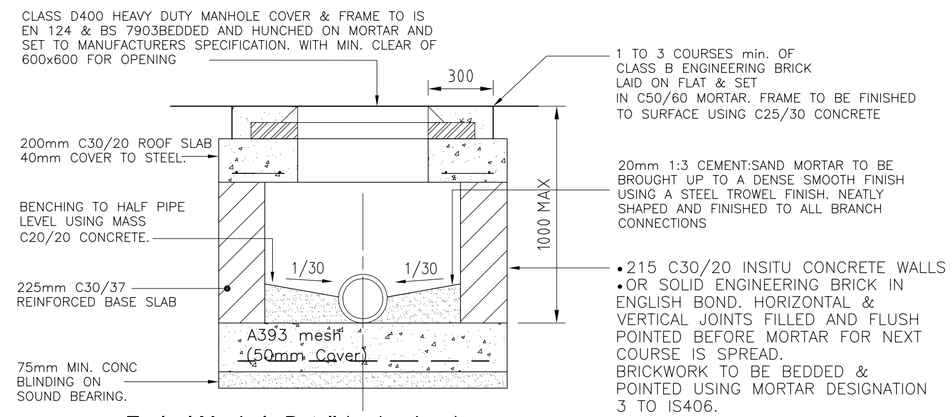


Typical Manhole Detail (≥<1m deep)
Scale 1:20

Proposed Reinforced Concrete Surround to Linear Drainage Channel

Concrete Strength Class C40/50 Dmax 20 concrete with Exposure Class XF4 & Slump Class S3, with max Water/Cement Ratio of 0.45 & High Range Water Reducing Admixture (HRWRA). Concrete to be reinforced using Enduro HPP45 Fibre dosage rate @ 5Kg/M3.

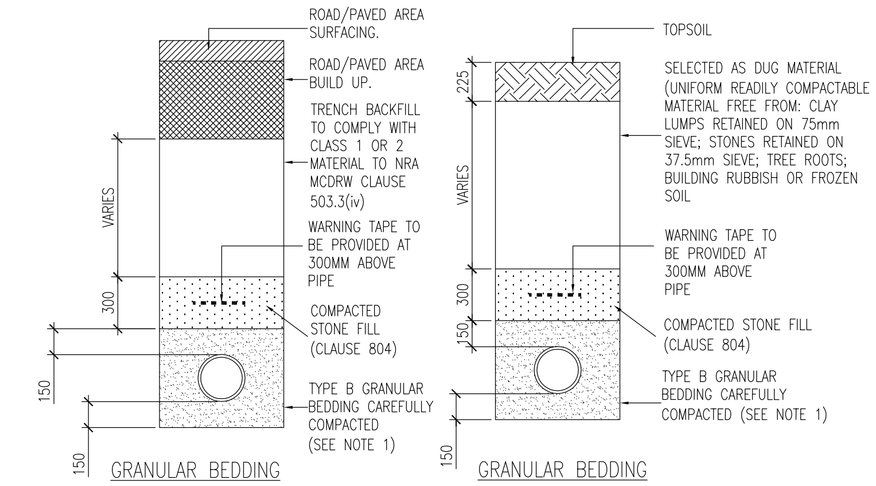


GRANULAR BEDDING
FOR PIPES UNDER ROADS/PAVED AREAS

GRANULAR BEDDING
FOR PIPES UNDER GRASSED AREA.

NOTES: –
1) GRANULAR BEDDING TYPE B SHALL CONSIST OF GRAVEL GRADED FROM 9.5mm TO 4.75mm. OTHER GRANULAR MATERIALS MAY BE USED SUBJECT TO APPROVAL
2) ALL PIPES UNDER FOUNDATIONS AND FLOORS SHALL BE HAUNCHED

## TYPICAL FOUL SEWER & SURFACE WATER PIPE BEDDING DETAILS

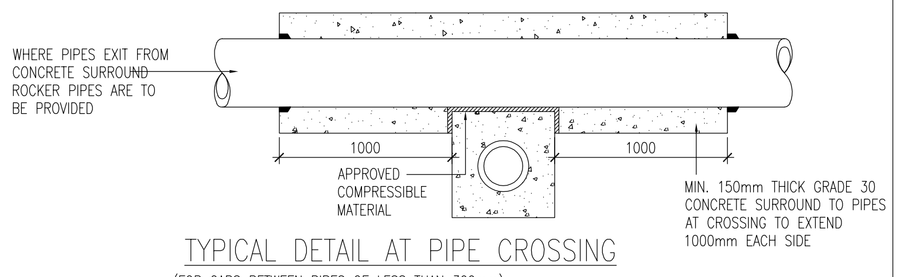


TYPICAL DETAIL AT PIPE CROSSING
(FOR GAPS BETWEEN PIPES OF LESS THAN 300mm)

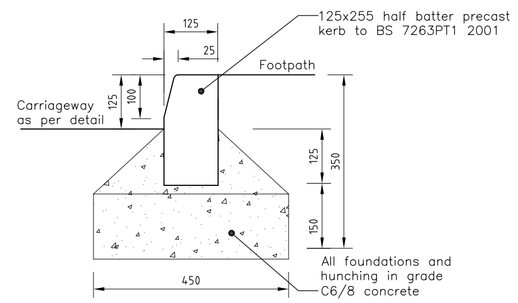


RAISED KERB DETAIL
SCALE 1:10

Attenuation Tank Schematic Layout

STORM WATER ATTENUATION TANK TO BE FORMED USING THE GRAF EcoBLOC PROPRIARTARY SYSTEM OEA

1000 GAUGE TERRAM OEA SURROUND TO tOP AND SIDES OF THE SOAKAWAY
NOTE: Geotextile not to be laid along the base

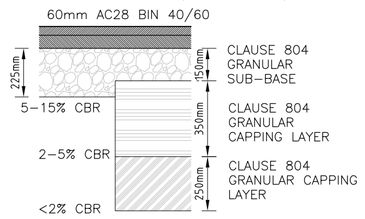


Section of Proposed Road Surfacing
Scale 1:20

COMHAIRLE CONTAE CHEATHARLACH
CARLOW COUNTY COUNCIL

Brennan Associates

Issue register

| Rev. | Date | Description | Dwn. | Chkd. | Appvd. |
|---|---|---|---|---|---|
| | 30.01.23 | Part 8 Submission | AD | IB | |

Client:
CARLOW COUNTY COUNCIL

Job Description:
THE SCHOOL HOUSE COMMUNITY AND ENTERPRISE CENTRE, RATHVILLY, Co. CARLOW

Project No: 22P1544
Drawing Ref: P04
Rev: –

Drawing Title:
PROPOSED SITE DETAILS

Date: 30.01.2023
Scale: 1:50, 1:20 & 1:10 @ A1
Drawn By: AD
Checked By: IB

Bowe Consulting Engineers


(059) 9137422
www.bce.ie
E-mail info@bce.ie
Carlow Gateway Business Centre
Athy Road, Carlow


© BOWE CONSULTING ENGINEERS